IN THE UNITED STATES DISTRICT COURT
DISTRICT OF DELAWARE (Wilmington)

TRANSCEND MEDICAL, INC.,	:	
	:	
Plaintiff,	:	**CIVIL ACTION**
	:	
v.	:	**NO. 13-830**
	:	
GLAUKOS CORPORATION,	:	
	:	
Defendant.	:	

Goldberg, J. **September 18, 2015**

MEMORANDUM OPINION

This case involves a patent dispute regarding devices designed to treat glaucoma. Both parties, Transcend Medical, Inc. and Glaukos Corporation, have developed technology designed to drain excess fluid from the eye, a common cause of glaucoma. Glaukos' technology is protected by patents: United States Patent Nos. 7,857,782 ("Patent '782"), 8,075,511 ("Patent '511") and 8,579,846 ("Patent '846"), which are the patents-in-suit.[1]

Transcend explains that it "heard through conversations with various individuals" that Glaukos claimed Transcend could not commercialize its technology without infringing the above mentioned patents. Thereafter, the parties exchanged letters disagreeing about the scope of these patents. (2d Am. Compl. ¶¶ 9-11.) Unable to resolve the dispute, Transcend filed a complaint seeking declaratory judgment of non-infringement and invalidity. Transcend also alleges that the

[1] A fourth patent owned by Glaukos, United States Patent No. 7,850,637 ("Patent '637"), was at issue prior to claim construction. Based on the summary judgment submissions, it is clear that the issues as to Patent '637 were resolved by the claims construction. (Pl.'s Mem. p. 1 n.1.)

The patents-in-suit claim priority to United States Provisional Application No. 60/28,973 ("Provisional Application '973"). (Pl.'s Mem. Ex. 2, Patent '782 cover page; Ex. 18, Patent '846 cover page; Ex. 28, Patent '511 cover page.)

patents are unenforceable due to inequitable conduct. Glaukos filed a counterclaim for infringement.

Presently before me is Transcend's motion for summary judgment regarding invalidity.[2] For the reasons set forth below, Transcend's motion will be granted in part and denied in part.

I. STANDARD OF REVIEW

A party moving for summary judgment bears the initial burden of demonstrating that there are no genuine issues of material fact and that judgment is appropriate as a matter of law. Fed. R. Civ. P. 56(a); Celotex Corp. v. Catrett, 477 U.S. 317, 323 (1986). Once a properly supported motion for summary judgment has been made, the burden shifts to the non-moving party, who must set forth specific facts showing that there is a genuine issue of material fact for trial. Anderson v. Liberty Lobby, Inc., 477 U.S. 242, 250 (1986).

An issue is "genuine" if a reasonable jury could rule in favor of the non-moving party based on the evidence presented. Id. at 248. In order to avert summary judgment, the non-moving party cannot rely on speculation or conclusory allegations but rather must cite to the record. Fed. R. Civ. P. 56(c). On a motion for summary judgment, the court considers the evidence in the light most favorable to the non-moving party. Anderson, 477 U.S. at 256.

Under 35 U.S.C. § 282(a), each claim of a patent is presumed valid independently of the validity of other claims. An accused infringer must prove invalidity by clear and convincing evidence. Tokai Corp. v. Easton Enterprises, Inc., 632 F.3d 1358, 1367 (Fed. Cir. 2011). Accordingly, a party "seeking to invalidate a patent at summary judgment must submit such clear and convincing evidence of invalidity." U. of Rochester v. G.D. Searle & Co., Inc., 358

[2] Transcend has also sought summary judgment on its non-infringement claim and Glaukos has sought summary judgment regarding inequitable conduct. These motions are addressed in separate opinions.

F.3d 916, 920 (Fed. Cir. 2004) (citing Eli Lilly and Co. v. Barr Laboratories, Inc., 251 F.3d 955, 962 (Fed. Cir. 2001)).

II. ANALYSIS

Transcend has moved for summary judgment on its invalidity claim, arguing that many of the asserted claims are invalid for failure to comply with the written description requirement of 35 U.S.C. § 112(a). Transcend also asserts that numerous claims are indefinite because they fail to inform one of skill in the art of the scope of the invention with reasonable certainty.

A. Written Description

Transcend first argues that the asserted claims are invalid because they fail to comply with the written description requirement of Section 112, which states:

> The specification shall contain a written description of the invention, and of the manner and process of making and using it, in such full, clear, concise, and exact terms as to enable any person skilled in the art to which it pertains, or with which it is most nearly connected, to make and use the same, and shall set forth the best mode contemplated by the inventor or joint inventor of carrying out the invention.

35 U.S.C. § 112(a).

The purpose of the written description requirement is "to prevent an applicant from later asserting that he invented that which he did not; the applicant for a patent is therefore required to recount his invention in such detail that his future claims can be determined to be encompassed within his original creation." Amgen Inc. v. Hoechst Marion Roussel, Inc., 314 F.3d 1313, 1330 (Fed. Cir. 2003). The written description requirement "serves a teaching function, as a 'quid pro quo' in which the public is given 'meaningful disclosure in exchange for being excluded from practicing the invention for a limited period of time.'" U. of Rochester, 358 F.3d at 922 (quoting Enzo Biochem, Inc. v. Gen-Probe, Inc., 323 F.3d 956, 970 (Fed. Cir. 2002)).

The written description requirement "prohibits new matter from entering into claim amendments, particularly during the continuation process." Agilent Technologies, Inc. v.

Affymetrix, Inc., 567 F.3d 1366, 1379 (Fed. Cir. 2009). To this end, the United States Court of Appeals for the Federal Circuit allows applicants to amend applications during prosecution to add claims if the "disclosure of the application relied upon reasonably conveys to those skilled in the art that the inventor had possession of the claimed subject matter as of the filing date." Ariad Pharm., Inc. v. Eli Lilly and Co., 598 F.3d 1336, 1351 (Fed. Cir. 2010). "Compliance with the written description requirement is a question of fact but is amenable to summary judgment in cases where no reasonable fact finder could return a verdict for the non-moving party." PowerOasis, Inc. v. T-Mobile USA, Inc., 522 F.3d 1299, 1307 (Fed. Cir. 2008).

1. Device for Drainage into the Uveal Scleral Outflow Pathway

The patents-in-suit recite implants configured to drain aqueous humor to the uveal scleral outflow pathway of the eye. (See, e.g., Pl.'s Mem. Ex. 2, Patent '782 claim 1; Ex. 28, Patent '511 claims 1 and 29; Ex. 18, Patent '846 claims 1, 16 and 25.)[3] Transcend argues that these claims are invalid for failing to comply with the written description requirement because the specification does not disclose a single device that drains aqueous humor to the uveal scleral outflow pathway.[4]

The specification references the uveal scleral outflow pathway twice. The Background of Invention section states "[t]he eye's pressure is determined by a balance between the production of aqueous and its exit through the trabecular meshwork (major route) or uveal scleral outflow

[3] In support of its motion for summary judgment, Transcend submitted numerous exhibits as attachments to the Declaration of Alyse L. Katz. I will refer to the exhibits attached to the Declaration of Alyse L. Katz as "Pl.'s Mem. Ex. ___."

[4] The term "uveal scleral outflow path" is synonymous with "uveoscleral outflow pathway" and "uveoscleral outflow path/route." (Joint Claim Construction Chart, p. 2.)

(minor route)." (Pl.'s Mem. Ex. 2, Patent 782 1:55-58.)[5] The Summary of the Invention section states "[v]arious embodiments of glaucoma shunts are disclosed herein for aqueous to exit through the trabecular meshwork (major route) or uveal scleral outflow (minor route) or other route effective to reduce intraocular pressure (IOP)." (Id. at 4:19-23.)

According to Transcend, the uveal scleral outflow pathway is only mentioned in the specification twice because the specification is entirely focused on the canalicular pathway. Transcend argues that the first mention in the Background of Invention Section simply notes that the pathway exists in the eye and does not describe the claimed invention. Transcend further contends that the second reference in the Summary of Invention statement is so general that it would not to permit one skilled in the art to identify the invention and, therefore, does not satisfy the written description requirement. Transcend points out that the specification's failure to adequately disclose a single device that drains aqueous humor into the uveal scleral outflow pathway is not surprising because the inventors did not possess such a device at the time Provisional Application '973 was filed with the United States Patent and Trademark Office ("USPTO").[6]

Glaukos counters that it identified sufficient evidence establishing that the specification of the patents-in-suit would reasonably convey to those skilled in the art that the inventors had

[5] The patents-in-suits have identical specifications but differ in their claims, abstracts and line numbering. (Pl.'s Mem. Ex. 1, Katz Opening Report p. 12.) For the sake of clarity, I will reference the line numbering in Patent '782 when citing to the specifications in the patents-in-suit.

[6] Transcend also notes that the European Patent Office ("EPO") found there was no disclosure of a device for uveal scleral drainage in a European patent application with the same disclosure as the patents-in-suit. Glaukos counters that the EPO's finding is irrelevant because the European disclosure requirement is far more stringent than the disclosure requirement in the United States.

I agree with Glaukos that the EPO's finding is of limited probative value and that my analysis should be constrained to application of the Section 112 standards to the patents-in-suit.

possession of an implant configured to drain aqueous humor to the uveal scleral outflow pathway. Glaukos points to the reference in the Summary of Invention section as well as a portion of the specification that describes an implant "that provides a channel for flow" between the anterior chamber and the choroid. (See Pl.'s Mem, Ex. 2, Patent '782, 23:9-11.)

Additionally, according to Glaukos experts, Dr. Jay Katz and Dr. Ron Yamamoto, a person of ordinary skill in the art would understand that an implant that provides for flow between the anterior chamber and the choroid necessarily drains fluid to the uveal scleral outflow pathway. (Dec. of Jay Katz, Ex. B, Katz Rebuttal Report pp. 14-15; Dec. of Ron Yamamoto, Ex. A, ¶ 44.) Additionally, Dr. Katz opines that Figure 43 in Patent '782 shows a stent with one end placed in the anterior chamber and the other end in communication with the uveal scleral outflow path. (Dec. of Katz, Ex. B, Katz Rebuttal Report pp. 15-17.)[7]

Glaukos further urges that they have offered evidence confirming that the inventors did in fact possess a device configured to drain fluid from the anterior chamber to the uveal scleral outflow pathway when they filed Provisional Application '973 in April 2001. Glaukos references a memorandum authored by one of the inventors, Dr. Richard Hill, describing an implant to

[7] Transcend argues that Dr. Katz's conclusion regarding Figure 43 is unsupported and inconsistent with the testimony of the named inventors as well as the opinions of Glaukos' other expert Dr. Yamamoto. As such, Transcend contends that Dr. Katz's testimony is insufficient to create a genuine issue of material fact as to the adequacy of the written description.

I disagree. Evidence that purportedly contradicts Dr. Katz's opinion simply highlights the existence of a genuine issue of material fact. Dr. Katz's opinion may be subject to cross-examination based on Transcend's evidence as well as the "inconsistencies" with Dr. Yamamoto's opinion. However, this does not mean that Dr. Katz's opinion is insufficient to create a genuine issue of material fact. Additionally, I must view the evidence in the light most favorable to Glaukos, the non-moving party.

direct fluid from the anterior chamber to the suprachoroidal space.[8] (Def.'s Opp. Ex. F.)[9] According to Glaukos, this memorandum demonstrates that the inventors possessed an implant for drainage to the uveal scleral outflow pathway prior to filing Provisional Application '973. Glaukos also points to notes from a meeting which document the inventors' discussions of a device to drain fluid to the suprachoroidal space.[10] These notes were submitted to the USPTO as an attachment to Provisional Application '973. (See Pl.'s Mem. Ex. 5.)

Based upon the evidence offered by Glaukos, particularly the opinions of Dr. Katz and Dr. Yamamoto, I conclude there is a genuine issue of material fact as to whether the patents-in-suit reasonably convey to those of skill in the art that the inventors had possession of an implant configured to drain aqueous humor to the uveal scleral outflow pathway at the time of filing.

2. Delivery Device that Engages in a Coaxial Manner

Claims 1 and 16 of Patent '846 disclose an applicator which is comprised of an elongated member, hand piece and deployment mechanism. Claim 1 recites that the elongated member

---

[8] In May of 2014, the USPTO granted Glaukos' petitions to correct the inventorship of the patents-in-suit. As a result, Dr. Hill and another individual, Olav B. Bergheim, were added as inventors to the patents-in-suit. (Pl.'s Mem. Exs. 35, 36, 37 and 38.)

[9] In support of its opposition to Transcend's motion for summary judgment, Glaukos submitted exhibits as attachments to the Declaration of Joshua Stowell. I will refer to the exhibits attached to the Declaration of Joshua Stowell as "Def.'s Opp. Ex. ___."

[10] The notes entitled "Glaukos Intellectual Property Meeting Notes" include a "[s]ubchloroidal shunt" in a list of ideas for potential glaucoma therapies. Transcend objects on the ground that no evidence establishes that "subchloroidal" means suprachoroidal and, therefore, these notes do not support Glaukos' argument that the inventors actually possessed a shunt for drainage to the uveal scleral outflow pathway.

However, one of the named inventors present at the meeting testified that the "l" in "subchloroidal" was a typo and the team used the term "subchoroidal" synonymously with "suprachoroidal." (See Def.'s Opp. Ex. G, Haffner Dep., 123:10-124:13.) Viewing the evidence in the light most favorable to Glaukos, a reasonable jury could conclude that the notes demonstrate that the inventors did in fact possess an invention for draining aqueous fluid to the suprachoroidal space.

"comprises a curved distal end portion that engages the ocular implant in a coaxial manner." Claim 16 recites that the implant and "at least the curved distal portion of the elongated member are positioned about a common axis before implantation." (Pl.'s Mem. Ex. 18, Patent '846, claims 1 and 16.)

Transcend argues that these delivery device claims are invalid for failing to comply with the written description requirement. Transcend contends that, although the specification of the patents-in-suit describes numerous implants and delivery devices, it does not disclose any such devices that engage each other in a coaxial manner.

Glaukos responds that Figure 29 depicts a delivery device with a curved distal portion and that the specification describes Figure 29 as depicting "a delivery apparatus or 'applicator' . . . having a curved tip." (Pl.'s Mem. Ex. 18, Patent '846 Figure 29, 16:25-27.) Glaukos also offers Dr. Yamamoto's opinion that, based on the specification, one of skill in the art would understand that the delivery device depicted in Figure 29 to be capable of coaxial engagement with the implant. (Dec. of Yamamoto, Ex. A, ¶ 112.)

Transcend disputes Dr. Yamamoto's conclusion and argues that the delivery device depicted in Figure 29 does not satisfy the written description requirement because the device depicted lacks a curved shape and has more than one axis meaning that it cannot engage the elongated member about a single common axis.

In light of the factual disputes detailed above, I agree with Glaukos that there is a genuine issue of fact as to whether the device depicted in Figure 29 is capable of coaxial engagement and possesses a curved tip. Transcend's arguments regarding the correctness of Dr. Yamamoto's conclusions do not obviate the need for submission to a fact finder but rather underscore the many factual disputes surrounding Transcend's written description claims. As such, summary

judgment based upon an alleged failure to comply with the written description requirement will be denied.

B. Indefiniteness

Transcend also argues that several of the asserted claims contained in the patents-in-suit are invalid because they contain indefinite terms. Section 112 imposes a "definiteness requirement." Nautilus, Inc. v. Biosig Instruments, Inc., 134 S. Ct. 2120, 2125 (2014). In relevant part, this section requires that the specification "conclude with one or more claims particularly pointing out and distinctly claiming the subject matter which the applicant regards as his invention." 35 U.S.C. § 112(b). Indefiniteness is a question of law. Teva Pharm. USA, Inc. v. Sandoz, Inc., 789 F.3d 1335, 1337 (Fed. Cir. 2015).

A "patent is invalid for indefiniteness if its claims, read in light of the specification delineating the patent, and the prosecution history, fail to inform, with reasonable certainty, those skilled in the art about the scope of the invention." Nautilus, 134 S. Ct. at 2124. "In the face of an allegation of indefiniteness, general principles of claim construction apply." Enzo Biochem, Inc. v. Applera Corp., 599 F.3d 1325, 1332 (Fed. Cir. 2010). "In that regard, claim construction involves consideration of primarily the intrinsic evidence, viz., the claim language, the specification, and the prosecution history." Id.

However, if necessary, a court may consult extrinsic evidence "to understand the meaning of a term in the relevant art at the relevant time." Teva, 789 F.3d at 1339. With this general understanding of the relevant art, "the district court must then conduct a legal analysis: whether a skilled artisan would ascribe that same meaning to that term in the context of the specific patent claim under review." Teva Pharm. USA, Inc. v. Sandoz, Inc., 135 S. Ct. 831, 841 (2015) (emphasis in original). In other words, although "experts may be examined to explain

terms of art, and the state of the art . . . they cannot be used to prove the proper or legal construction of any instrument of writing." Teva, 789 F.3d at 1342 (citing Teva, 135 S. Ct. at 841).

1. "Choroid"

Transcend argues that the claims using the term "choroid" are invalid because the patents-in-suit define the term in multiple inconsistent ways.[11] The parties agree that the plain and ordinary meaning of the term "choroid" is the vascular layer of the eye located between the sclera and retina. (Dec. of Katz, Ex. B, Katz Rebuttal Report pp. 10-11; Pl.'s Mem. pp. 17-18.)

Transcend concedes, and I agree, that the patents-in-suit at times define "choroid" consistent with the term's plain and ordinary meaning. (See Pl.'s Mem. p. 18 n.34.) Nonetheless, Transcend contends that the patents-in-suit also define "choroid" in two additional ways rendering the term indefinite. Specifically, Transcend points out that the patents-in-suit also define the choroid as "'coextensive with' (and thus including, not distinct from) the ciliary body." (Pl.'s Mem. p. 18.) Transcend cites Patent '782 which states "[a] ciliary body 16 extends along the interior of the sclera 11 and is coextensive with a choroid 17." (Pl.'s Mem. Ex. 2, Patent '782 8:49-50). Transcend also points out that the choroid is labeled to include the ciliary body in Figures 43 and 44.

[11] The term "choroid" appears in Patent '782 claims 16 and 17, Patent '511 claims 2 and 31, and Patent '846 claims 14, 19 and 28. (See Pl.'s Mem. Ex. 11, Yamamoto Report ¶ 36.)

Figure 43 appears as follows:

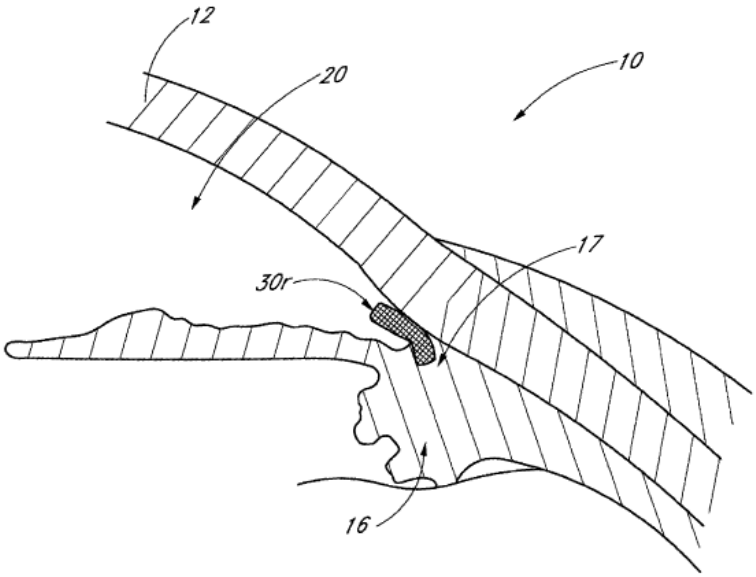

FIG. 43

(Pl.'s Mem. Ex. 2, Patent '782 Fig. 43.)

Figure 44 appears as follows:

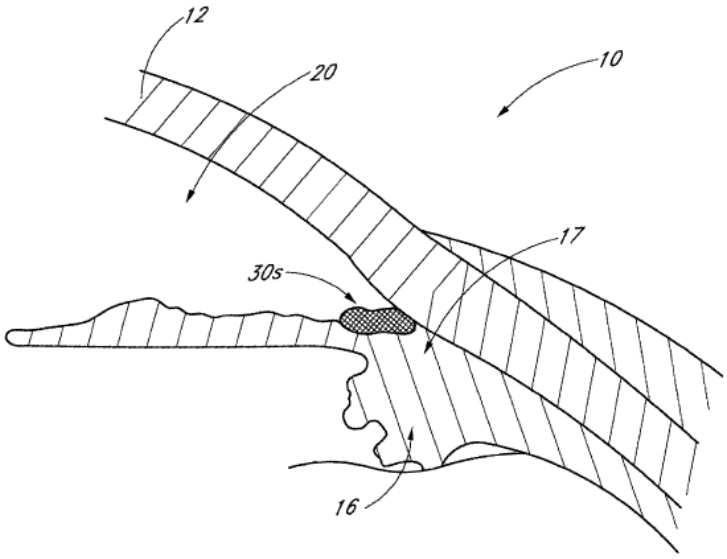

FIG. 44

(Pl.'s Mem. Ex. 2, Patent '782 Fig. 44.)

According to the specification, the lead line numbered "17" points to the choroid and the lead line numbered "16" points to the ciliary body. (Id. at 8:48-50.) Notwithstanding this separate numbering, Transcend contends that Figures 43 and 44 are labeled in such a way as to depict the choroid as encompassing the ciliary body. Transcend further notes that Glaukos argued that the choroid encompassed the ciliary body to the USPTO in 2009 in connection with an amendment to a related application stemming from the same provisional application (Provisional Application '973) as the patents-in-suit.[12]

Glaukos counters that the patents-in-suit state that the ciliary body is "coextensive" with the choroid because the two elements have an anatomical relationship and form a common layer of the eye called the uvea. In support, Glaukos offers Dr. Yamamoto's conclusion that a person of ordinary skill in the art would understand "co-extensive" as describing this contiguous layer and that this term does not mean that the choroid and ciliary body are one and the same. (Pl.'s Mem. Ex. D, Yamamoto Report at ¶ 11.)

Dr. Yamamoto's opinion fails to account for the fact that Glaukos argued to the USPTO that Provisional Application '973 defined choroid to include the ciliary body in 2009. The statements Glaukos made during prosecution of Application '542 regarding the definition of the choroid apply to the related patents-in-suit. See Biovail Corp. Intern. v. Andrx Pharm., Inc., 239 F.3d 1297, 1301 (Fed. Cir. 2001) (quoting Elkay Mfg. Co. v. Ebco Mfg. Co., 192 F.3d 973, 979 (Fed. Cir. 1999) ("When multiple patents derive from the same initial application, the

[12] Patent '782 is a division of United States Patent Application No. 11/598,542 ("Application '542"). Patent '511 and '846 are continuations of Application '542. Application '542 and the patents-in-suit all claim priority to Provisional Application '973.

In support of an amendment to Application '542, Glaukos argued that the figures submitted with Provisional Application '973 "disclose[d] that ciliary tissue is part of the choroid." (Pl.'s Mem. Ex. 21, Amendment After Allowance – App. '542 p. 6.) For ease of reference, I will refer to the specification of Provisional Application '973 as the "original specification."

prosecution history regarding a claim limitation in any patent that has issued applies with equal force to subsequently issued patents that contain the same claim limitation")); Teva, 789 F.3d at 1343 ("A statement made during prosecution of related patents may be properly considered in construing a term common to those patents, regardless of whether the statement pre- or post-dates the issuance of the particular patent at issue.")

Pursuant to recent guidance from the Federal Circuit, I may not defer to Dr. Yamamoto's opinion on the ultimate meaning of the term, especially where that opinion contradicts the clear import of the prosecution history and the language of the specification. See Teva, 789 F.3d at 1342 ("The district court should not defer to Dr. Grant's ultimate conclusion about claim meaning in the context of this patent nor do we defer to the district court on this legal question"). Therefore, based on the intrinsic evidence, including clear statements in the prosecution history, I conclude that one of skill in the art would understand the patents-in-suit as offering two conflicting definitions of the term "choroid."

In addition to these two definitions, Transcend argues that the patents-in-suit offer a third definition of the choroid as encompassing the chorodial tissue, the ciliary body and the iris. According to Transcend, the specification's discussion of Figure 44 depicts this third definition of the choroid. The specification states that Figure 44 illustrates an embodiment in which "the osmotic membrane 30s is used to replace a portion of the endothelial layer of the choroid 17." (Pl.'s Mem. Ex. 2, Patent 782 23:19-28.) Transcend's expert Dr. Bruce Shields contends that Figure 44 actually depicts the osmotic membrane replacing portions of the ciliary body, choroid and iris. (Pl.'s Mem. Ex. 45, Shields Dep. 273:6-275:10.)

According to Transcend, Glaukos argued during an interview with an examiner from the USPTO that it should adopt this third definition of the term choroid in 2014.[13] Transcend points to an interview summary authored by the USTPO examiner which states that Glaukos' counsel argued that the original specification "defined 'choroid' to mean 'uvea,' and that those of ordinary skill in the art would take 'uvea' to mean 'choroid + ciliary body + iris.'" (Pl.'s Mem. Ex. 23, 24.)[14]

According to Glaukos' experts, Figures 43 and 44 contain an "obvious" error and that one of skill in the art would "immediately recognize" that the lead-lines pointing to the choroid in the two figures were misplaced. In support of this conclusion, Glaukos offers Dr. Katz's opinion that the erroneously placed lead lines in Figure 43 and 44 would not alter the understanding of "choroid" held by one of ordinary skill in the art. (Pl.'s Mem. Ex. 10, Katz Rebuttal Report pp. 12-13.)

Glaukos' contention that one of skill in the art would essentially ignore the definition of the choroid inherent in Figures 43 and 44 is unavailing. This argument is undercut by the fact that Glaukos argued to the USPTO that the term choroid included the ciliary body and iris. As such, Glaukos' argument amounts to a request to erase Figures 43 and 44 as well as statements

---

[13] The interviews Transcend cites were conducted in connection with United States Patent Application Nos. 13/786,363 ("Application '363") and 13/786,357 ("Application '357"). Like the patents-in-suit, Applications '363 and '357 claim priority to Provisional Application '973. As such, the prosecution history of Applications '363 and '357 are relevant to the patents-in-suit as they share a common relationship to the Provisional Application '973.

[14] Glaukos counters that the examiner's summary inaccurately the reflects statements it made during the interview. Glaukos' patent attorney testified that portions of the examiner's summary were inaccurate but he could not recall whether the "choroid + ciliary body + iris" reference at issue was inaccurate. (See Def.'s Opp. Ex. P, Shreve Dep. 298:20-301:7.)

In a "Response to Office Action," Glaukos did seek to clarify another statement made by counsel during the interview. (Pl.'s Mem. Ex. 48 p. 35.) However, Glaukos failed to address the supposedly inaccurate recitation of its statements regarding the composition of the choroid.

made during prosecution. Such an argument "is inimical to the public notice function provided by the prosecution history." Hockerson-Halberstadt, Inc. v. Avia Group Intern., Inc., 222 F.3d 951, 957 (Fed. Cir. 2000). The prosecution history "constitutes a public record of the patentee's representations concerning the scope and meaning of the claims, and competitors are entitled to rely on those representations when ascertaining the degree of lawful conduct, such as designing around the claimed invention." Id.

Having variously represented to the USTPO that the choroid encompasses (1) the choroid and the ciliary body but also (2) the choroid, ciliary body and iris, Glaukos' experts cannot now opine that patents-in-suit, read in light of the prosecution history, convey with reasonable certainty to one skilled in the art that choroid means only the chorodial tissue. Glaukos' experts attempt to salvage the inconsistency by adopting the term's plain and ordinary meaning impermissibly rewrites the specification and ignores the relevant prosecution history. As such, I find that the specification fails to inform, with reasonable certainty, those skilled in the art as to the scope of the term "choroid." Therefore, the asserted claims using the term "choroid" are indefinite and invalid.

2. "Less Than About 1 mm"

Claims 1 and 29 of Patent '511 (and their dependent claims) recite a delivery device configured to access the anterior chamber through an incision having a size "less than about 1 mm." According to Transcend, neither the specification nor the prosecution history provide any guidance as to the "range of dimensions" encompassed by "less than about." In support, Transcend asserts that Glaukos' experts offer inconsistent interpretations of the term to mean close to 1 millimeter, less than approximately 1 millimeter and no larger than about 1.1 or 1.2

millimeter. (Pl.'s Mem. Ex. 10, Katz Rebuttal Report p. 60; Dec. of Ron Yamamoto, Ex. A, ¶¶ 125-7.)

Glaukos counters that one of skill in the art would understand the term with reasonable certainty given the context of the invention. Glaukos' experts, Dr. Yamamoto and Dr. Richard Lewis, opined that the micro-knifes used to make corneal incisions commonly come in 1mm size and the natural imprecision of a surgeon's hand creates an incision slightly larger than the size of the blade. (Dec. of Ron Yamamoto, Ex. A, ¶¶ 125-7; Def.'s Opp. Ex. J, Lewis Dep. 27:9-28:9.) As such, Glaukos contends that persons of skill in the art of ophthalmology would understand the scope of the term with reasonable certainty.

Read in light of the specification, I find that one of skill in the art would understand the term "less than about 1 mm" with reasonable certainty. "Claim language employing terms of degree has long been found definite where it provided enough certainty to one of skill in the art when read in the context of the invention." Interval Licensing LLC v. AOL, Inc., 766 F.3d 1364, 1370 (Fed. Cir. 2014). Given the context of the term, one of skill in the art of ophthalmology would understand that the term's somewhat approximate phraseology accounts for the natural and commonplace imprecision of surgical incisions. See Biosig Instruments, Inc. v. Nautilus, Inc., 783 F.3d 1374, 1382 (Fed. Cir. 2015) ("[t]he degree of precision necessary for adequate claims is a function of the nature of the subject matter.") As such, a strict exact limitation on the size of incision would be inappropriate and the phraseology of the contested term accounts for this. As such, the term "less than about 1 mm" informs a skilled artisan as to the scope of the invention with reasonable certainty and, thus, is not indefinite.

3. **“Deflection Range”**

Several of the claims require that the distal portion of the elongated member of the delivery device have a “deflection range.” (Pl’s Mem. Ex. 2, Patent ‘782 claim 14; Ex. 29, Patent ‘511 claims 1-2, 6-7, 10, 15, 17 and 22-24; Ex. 18, Patent ‘846 claims 13, 23, and 31.) Transcend argues that this term is indefinite because the patents provide no guidance as to when, how, or how much a delivery device must deflect or flex in order to infringe the recited “deflection range.” Transcend further argues that all materials are flexible when subject to sufficient force and, therefore, the term “deflection range” is indefinite.

Glaukos responds that when considered in the context of the invention, i.e. a delivery device to be used in the eye, one of ordinary skill would recognize whether the device has a deflection range. Consistent with this argument, Glaukos’ experts opined that a person of ordinary skill would understand the term to mean that the distal portion can be flexed under a load without permanent deformation or breakage. (Pl.’s Mem. Ex. 10, Katz Rebuttal Report pp. 48-49; Dec. of Ron Yamamoto, Ex. A ¶ 103.)

When read in light of the specification and considered in the context of the ophthalmologic subject matter, I conclude that one of skill in the art would understand the bounds of “deflection range” with reasonable certainty. In reaching this conclusion, I first consulted the specification which states:

> The distal portion of the elongate tip is made of a flexible material. This can be a flexible wire. The distal portion can have a deflection range, preferably about 45 degrees from the long axis of the handpiece.

(Pl.’s Mem. Ex. 2, Patent ‘782 17:39-42.) Transcend’s argument that all materials are flexible when subject to sufficient force fails to account for the fact that the term must be considered in the context of the invention, which is a delivery device for use in the eye. I agree with Glaukos

that one of skill in the art would understand that the delivery device must deflect or flex when pressed against ocular tissue and must do so without permanent deformation or breakage.

III. CONCLUSION

For the foregoing reasons, Transcend's motion for summary judgment of invalidity is granted in part and denied in part. An appropriate order follows.

IN THE UNITED STATES DISTRICT COURT
DISTRICT OF DELAWARE (Wilmington)

TRANSCEND MEDICAL, INC.	:	
	:	
Plaintiff	:	**CIVIL ACTION**
	:	
v.	:	**NO. 13-830**
	:	
GLAUKOS CORPORATION	:	
	:	
Defendant	:	

ORDER

AND NOW, this 18th day of September, 2015, upon consideration of "Transcend's Memorandum in Support of its Motion for Summary Judgment of Invalidity" (Doc. No. 212), "Glaukos Corporation's Opposition to Transcend's Motion for Summary Judgment" (Doc. No. 234), and "Transcend's Reply in Support of its Motion for Summary Judgment of Invalidity" (Doc. No. 256), it is hereby **ORDERED** that Plaintiff's motion for summary judgment is **GRANTED in part** and **DENIED in part** as follows:

- The motion is **GRANTED** insofar as Claims 16 and 17 of Patent '782; Claims 2 and 31 of Patent '511; and Claims 14, 19 and 28 of Patent '846 are **INVALID** as the term "choroid" is **INDEFINITE**.
- The motion is **DENIED** in all other respects.

BY THE COURT:

/s/ Mitchell S. Goldberg

Mitchell S. Goldberg, J.